ITEM NO.	Part number	Description	qty.	Vendor	VendorPN	Type	ShT.#
1	mount	Mount	1	-	-	C	1
2	arm	arm	4	-	-	C	2
3	sawblade	sawblade	1	-	-	C	3

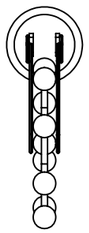

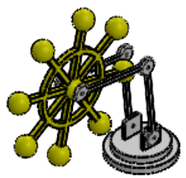

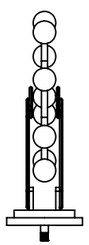

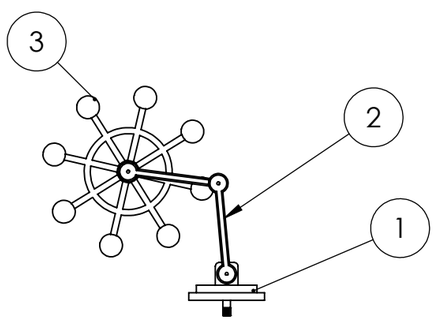

PART TITLE: ROBOTIC ARM SUBASSEMBLY

NUMBER: SUBASSEMBLY SAWBLADE+ARM+MOUNT | VER A

Mechanical Engineering
COLLEGE OF ENGINEERING
UNIVERSITY OF WISCONSIN–MADISON

CLASS: ME 231
LAB: 303

NOTE: 9090093973 DRAFTING STANDARD APPLIES

STANDARD TOLERANCES
UNLESS OTHERWISE SPECIFIED DIMENSIONS ARE IN INCHES.

INCH		mm	
.X	±0.1	X.	±0.25
.XX	±0.01	.X	±0.1
.XXX	±0.005	.XX	±0.05
.XXXX	±0.0005	.XXX	±0.010

ANGLES ±1°

APPROVALS	DATE
DRAWN W. KASALAJTIS	4/11/2026
DESIGNER W. KASALAJTIS	4/11/2026
ENGINEER W. KASALAJTIS	4/11/2026
CHECKED A. PICKERT	4/15/2026

UNLESS OTHERWISE SPECIFIED, LIMIT DIMENSIONS ARE ABSOLUTE, UNILATERAL AND BILATERAL DIMENSIONS PERMIT ROUNDING PER SOP ROUNDING AND SIGNIFICANT DIGITS

MATERIAL
-

SURFACE TREATMENT (UNLESS OTHERWISE SPECIFIED DIMENSIONS APPLY PRIOR TO TREATMENT)
-

CONFIDENTIAL — THIS DOCUMENT CONTAINS CONFIDENTIAL AND PROPRIETARY INFORMATION THAT IS THE PROPERTY OF THE UNIVERSITY OF WISCONSIN–MADISON, DEPARTMENT OF MECHANICAL ENGINEERING. NEITHER THIS DOCUMENT NOR THE INFORMATION CONTAINED HEREIN MAY BE REPRODUCED, USED, OR DISCLOSED TO ANY THIRD PARTY WITHOUT PRIOR WRITTEN CONSENT.

TITLE: ROBOTIC ARM SUBASSEMBLY

DWG SIZE: B

THIRD ANGLE PROJECTION

DOCUMENT NUMBER: **SUBASSEMBLY SAWBLADE+ARM+MOUNT**

VER: A

SCALE: 1:10
DO NOT SCALE HARD COPY DRAWINGS

SHEET 1 OF 4

SOLIDWORKS Educational Product. For Instructional Use Only.

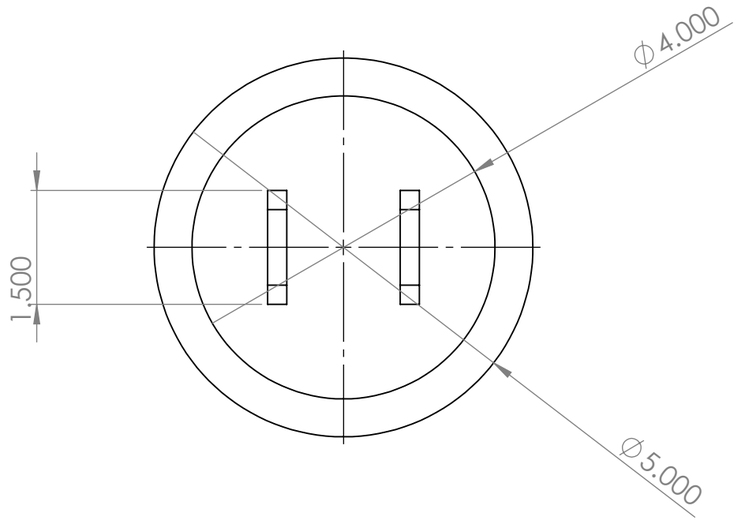

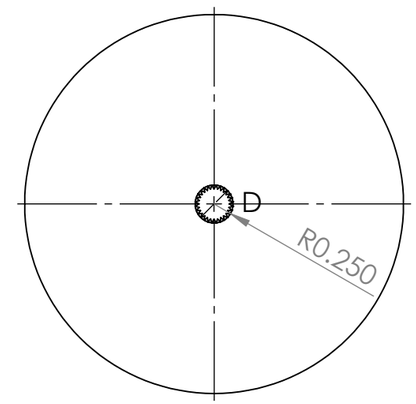

SECTION C-C
SCALE 1 : 2

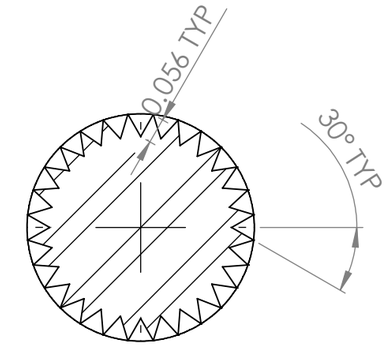

DETAIL D
SCALE 3 : 1

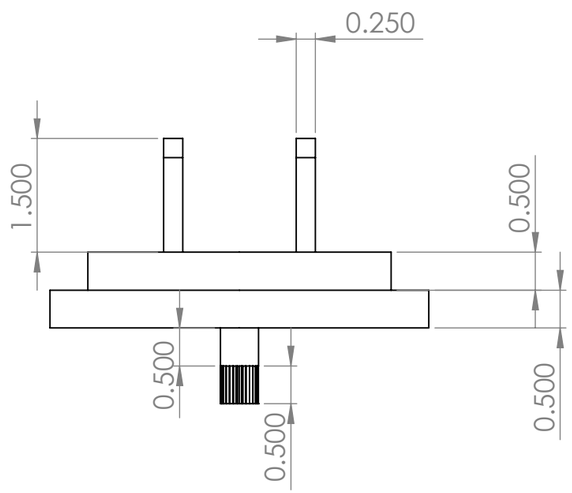

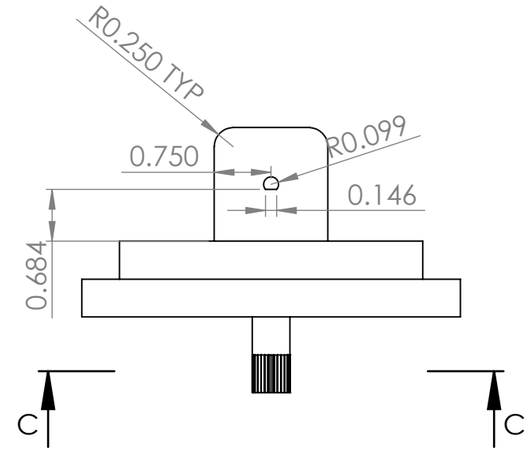

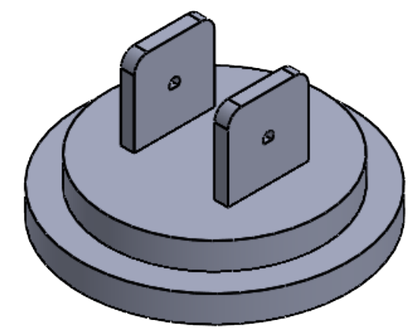

NOTE: 9090093973 DRAFTING STANDARD APPLIES

STANDARD TOLERANCES UNLESS OTHERWISE SPECIFIED DIMENSIONS ARE IN INCHES.		APPROVALS	DATE
INCH	mm	DRAWN W. KASALAJTIS	4/11/2026
.X ±0.1	X. ±0.25	DESIGNER W. KASALAJTIS	4/11/2026
.XX ±0.01	.X ±0.1	ENGINEER W. KASALAJTIS	4/11/2026
.XXX ±0.005	.XX ±0.05	CHECKED A. PICKERT	4/15/2026
.XXXX ±0.0005	.XXX ±0.010		
ANGLES ±1°			

UNLESS OTHERWISE SPECIFIED, LIMIT DIMENSIONS ARE ABSOLUTE, UNILATERAL AND BILATERAL DIMENSIONS PERMIT ROUNDING PER SOP ROUNDING AND SIGNIFICANT DIGITS

MATERIAL
PLAIN CARBON STEEL

SURFACE TREATMENT (UNLESS OTHERWISE SPECIFIED DIMENSIONS APPLY PRIOR TO TREATMENT)

PART TITLE: MOUNT

NUMBER: MOUNT | VER A

Mechanical Engineering
COLLEGE OF ENGINEERING
UNIVERSITY OF WISCONSIN–MADISON

CLASS: ME 231
LAB: 303

CONFIDENTIAL — THIS DOCUMENT CONTAINS CONFIDENTIAL AND PROPRIETARY INFORMATION THAT IS THE PROPERTY OF THE UNIVERSITY OF WISCONSIN–MADISON, DEPARTMENT OF MECHANICAL ENGINEERING. NEITHER THIS DOCUMENT NOR THE INFORMATION CONTAINED HEREIN MAY BE REPRODUCED, USED, OR DISCLOSED TO ANY THIRD PARTY WITHOUT PRIOR WRITTEN CONSENT.

TITLE: ROBOTIC ARM SUBASSEMBLY

DWG SIZE		DOCUMENT NUMBER	VER
B	THIRD ANGLE PROJECTION	SUBASSEMBLY SAWBLADE+ARM+MOUNT	A
	SCALE: 1:10 DO NOT SCALE HARD COPY DRAWINGS		SHEET 2 OF 4

SOLIDWORKS Educational Product. For Instructional Use Only.

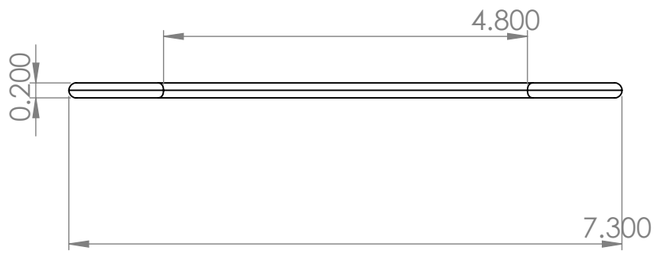

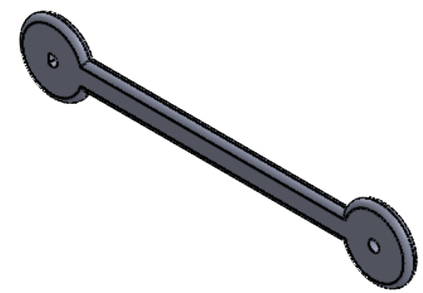

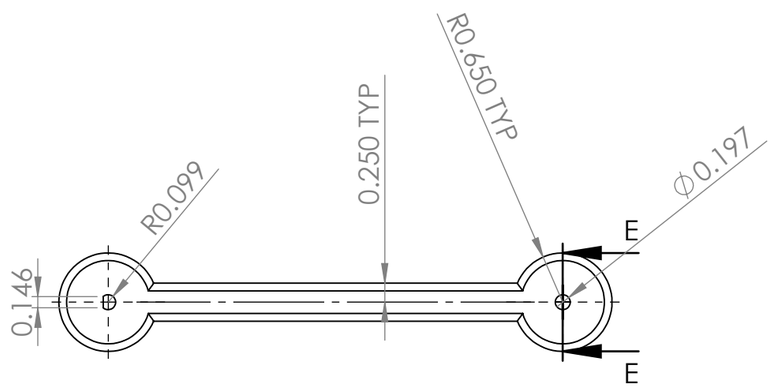

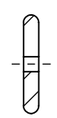

SECTION E-E
SCALE 1 : 2

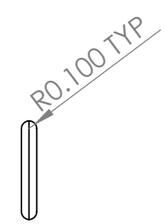

PART TITLE: ARM	
NUMBER: ARM	VER A
Mechanical Engineering COLLEGE OF ENGINEERING UNIVERSITY OF WISCONSIN–MADISON	CLASS: ME 231 LAB: 303

CONFIDENTIAL — THIS DOCUMENT CONTAINS CONFIDENTIAL AND PROPRIETARY INFORMATION THAT IS THE PROPERTY OF THE UNIVERSITY OF WISCONSIN–MADISON, DEPARTMENT OF MECHANICAL ENGINEERING. NEITHER THIS DOCUMENT NOR THE INFORMATION CONTAINED HEREIN MAY BE REPRODUCED, USED, OR DISCLOSED TO ANY THIRD PARTY WITHOUT PRIOR WRITTEN CONSENT.

TITLE: ROBOTIC ARM SUBASSEMBLY

NOTE: 9090093973 DRAFTING STANDARD APPLIES

STANDARD TOLERANCES
UNLESS OTHERWISE SPECIFIED DIMENSIONS ARE IN INCHES.

INCH		mm	
.X	±0.1	X.	±0.25
.XX	±0.01	.X	±0.1
.XXX	±0.005	.XX	±0.05
.XXXX	±0.0005	.XXX	±0.010

ANGLES ±1°

APPROVALS	DATE
DRAWN W. KASALAJTIS	4/11/2026
DESIGNER W. KASALAJTIS	4/11/2026
ENGINEER W. KASALAJTIS	4/11/2026
CHECKED A. PICKERT	4/15/2026

UNLESS OTHERWISE SPECIFIED, LIMIT DIMENSIONS ARE ABSOLUTE, UNILATERAL AND BILATERAL DIMENSIONS PERMIT ROUNDING PER SOP ROUNDING AND SIGNIFICANT DIGITS

MATERIAL
PLAIN CARBON STEEL

SURFACE TREATMENT (UNLESS OTHERWISE SPECIFIED DIMENSIONS APPLY PRIOR TO TREATMENT)

DWG SIZE		DOCUMENT NUMBER	VER
B	THIRD ANGLE PROJECTION	**SUBASSEMBLY SAWBLADE+ARM+MOUNT**	A
	SCALE: 1:10 DO NOT SCALE HARD COPY DRAWINGS		SHEET 3 OF 4

SOLIDWORKS Educational Product. For Instructional Use Only.

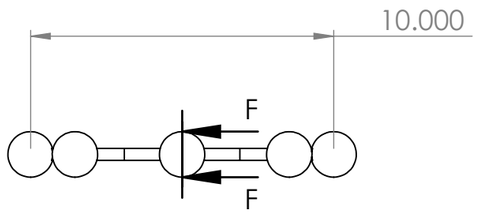

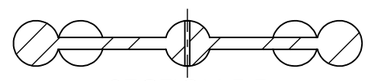

SECTION F-F
SCALE 1 : 5

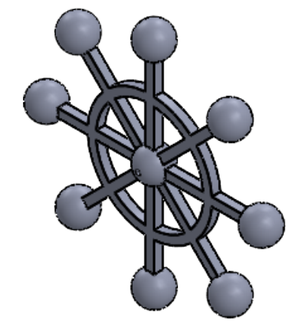

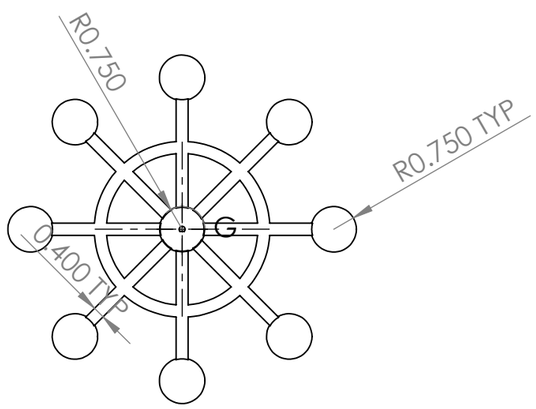

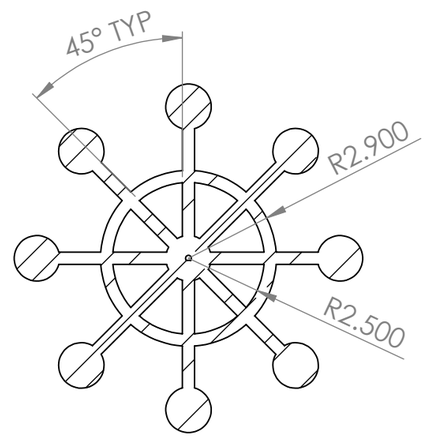

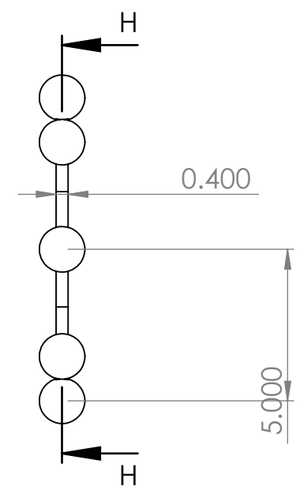

SECTION H-H
SCALE 1 : 5

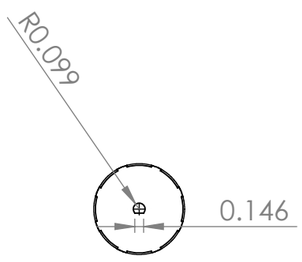

DETAIL G
SCALE 2 : 5

NOTE: 9090093973 DRAFTING STANDARD APPLIES

STANDARD TOLERANCES
UNLESS OTHERWISE SPECIFIED DIMENSIONS ARE IN INCHES.

INCH		mm	
.X	±0.1	X.	±0.25
.XX	±0.01	.X	±0.1
.XXX	±0.005	.XX	±0.05
.XXXX	±0.0005	.XXX	±0.010

ANGLES ±1°

APPROVALS	DATE
DRAWN W. KASALAJTIS	4/11/2026
DESIGNER W. KASALAJTIS	4/11/2026
ENGINEER W. KASALAJTIS	4/11/2026
CHECKED A. PICKERT	4/15/2026

UNLESS OTHERWISE SPECIFIED, LIMIT DIMENSIONS ARE ABSOLUTE, UNILATERAL AND BILATERAL DIMENSIONS PERMIT ROUNDING PER SOP ROUNDING AND SIGNIFICANT DIGITS

MATERIAL
PLAIN CARBON STEEL

SURFACE TREATMENT (UNLESS OTHERWISE SPECIFIED DIMENSIONS APPLY PRIOR TO TREATMENT)

PART TITLE: SAWBLADE

NUMBER: SAWBLADE | VER A

Mechanical Engineering
COLLEGE OF ENGINEERING
UNIVERSITY OF WISCONSIN–MADISON

CLASS: ME 231
LAB: 303

CONFIDENTIAL — THIS DOCUMENT CONTAINS CONFIDENTIAL AND PROPRIETARY INFORMATION THAT IS THE PROPERTY OF THE UNIVERSITY OF WISCONSIN–MADISON, DEPARTMENT OF MECHANICAL ENGINEERING. NEITHER THIS DOCUMENT NOR THE INFORMATION CONTAINED HEREIN MAY BE REPRODUCED, USED, OR DISCLOSED TO ANY THIRD PARTY WITHOUT PRIOR WRITTEN CONSENT.

TITLE: ROBOTIC ARM SUBASSEMBLY

DWG SIZE: B

THIRD ANGLE PROJECTION

DOCUMENT NUMBER: **SUBASSEMBLY SAWBLADE+ARM+MOUNT**

VER: A

SCALE: 1:10
DO NOT SCALE HARD COPY DRAWINGS

SHEET 4 OF 4

SOLIDWORKS Educational Product. For Instructional Use Only.